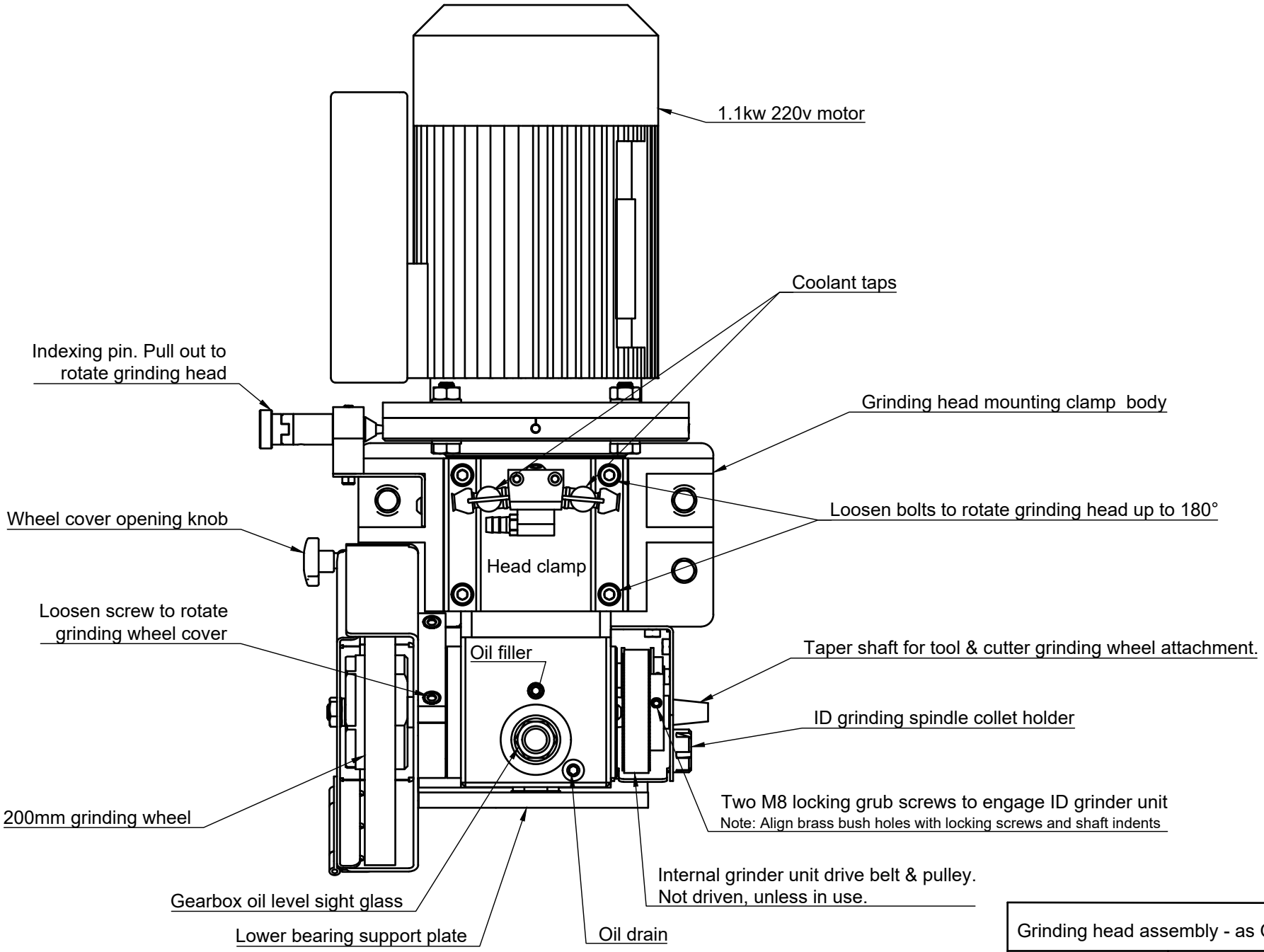

Grinding head assembly - as OD grinder		
Albert Questiaux	2024/12/21	Ver 3